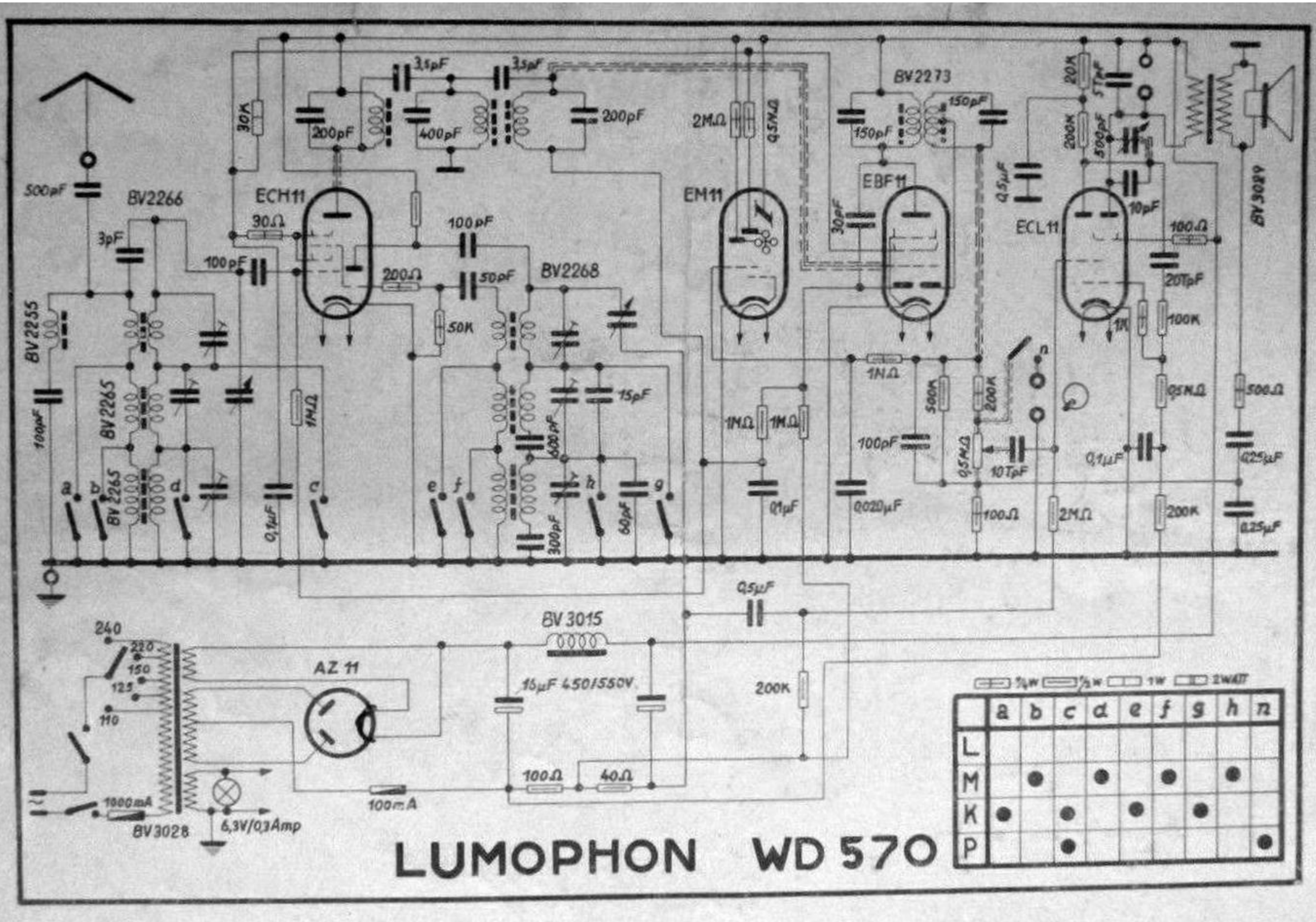

	a	b	c	d	e	f	g	h	n
L									
M		●		●		●		●	
K	●		●		●		●		
P			●						●

LUMOPHON WD 570